YT-4981P-A2 Lens Specification

1.SENSOR SIZE		1/2.5"(MAXØ7.4)
2.FOCAL LENGTH (EFL)	f=	8.0mm±5%
3.F/NO (INFINITE)	F/NO=	1.6±5%
4.BACK FOCAL LENGTH	BFL=	6.08mm±0.2mm
5.FLANGE BACK LENGTH	FB=	5.25mm±0.2mm
6.FIELD OF VIEW(D)	=	48.8°±5%(H3.3)
FIELD OF VIEW(H)	=	35.0°±5%(H2.4)
FIELD OF VIEW(V)	=	26.1°±5%(H1.8)
7.TV DISTORTION	<	-3.5%±3%(H3.6)
8.THREAD SIZE	=	M12×P0.5-6g
9.RELATIVE ILLUMINATION	=	≥40%±5%(H≤3.6)
10.CRA	=	14.98°±3°

11.SpectralTransmission:
436~656nm T≥80%

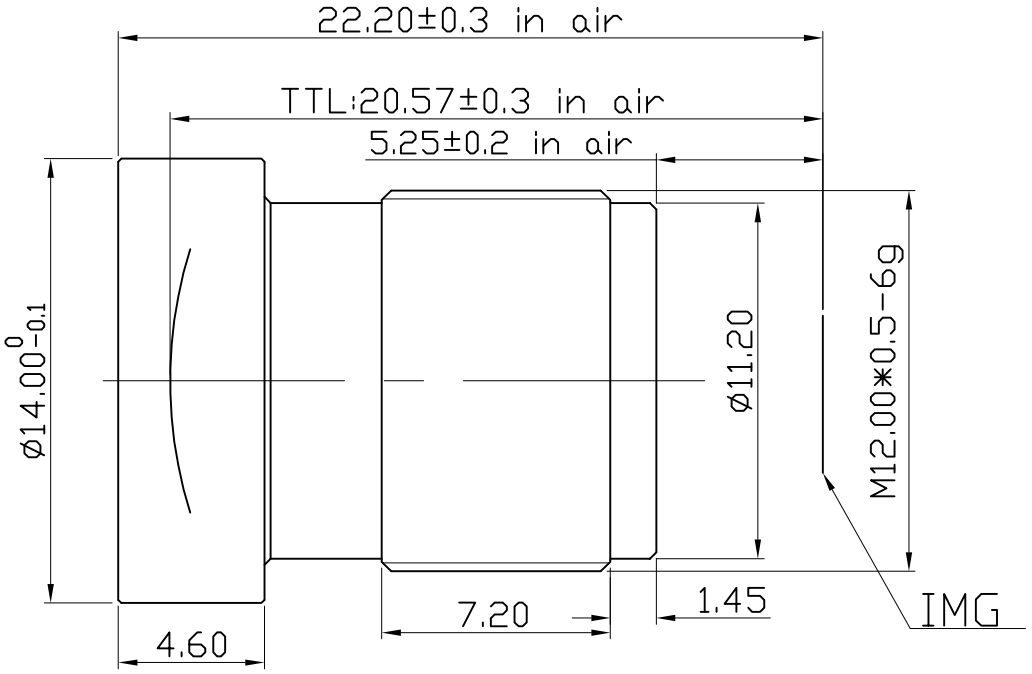

REV	DESCRIPTION	DATE	NAME
①			
②			
③			
④			

NAME	YT-4981P-A2			NAME	DATE
VIEW	REV	00	DRAWN	黄光深	2024.03.16
Wintop Optics			CHECKED		
			APPROVED		