YT-1700-H1 Lens Specification

1.SENSOR SIZE		OV10640(1280*1080)
2.WAVELENGTH	λ=	400~1100
3.FOCAL LENGTH (EFL)	f=	3.16mm
4.F/NO (INFINITE)	F/NO=	2.8
5.BACK FOCAL LENGTH	BFL=	6.22mm
6.FLANGE BACK LENGTH	FB=	5.18mm
7.FIELD OF VIEW(D)	=	142°(Φ7.03)
FIELD OF VIEW(H)	=	104°(Φ5.37)
FIELD OF VIEW(V)	=	87°(Φ4.53)
8.TV DISTORTION	<	-20%
9.THREAD SIZE	=	M12xP0.5
10.STRUCTURE	=	6G+1IR
11.RELATIVE ILLUMINATION	=	>95%
12.CRA	=	5°

Tavg>=90% @420~620nm
T=50% @650±10nm
Tavg<=3% @700~1000nm
Tavg<5% @1050nm

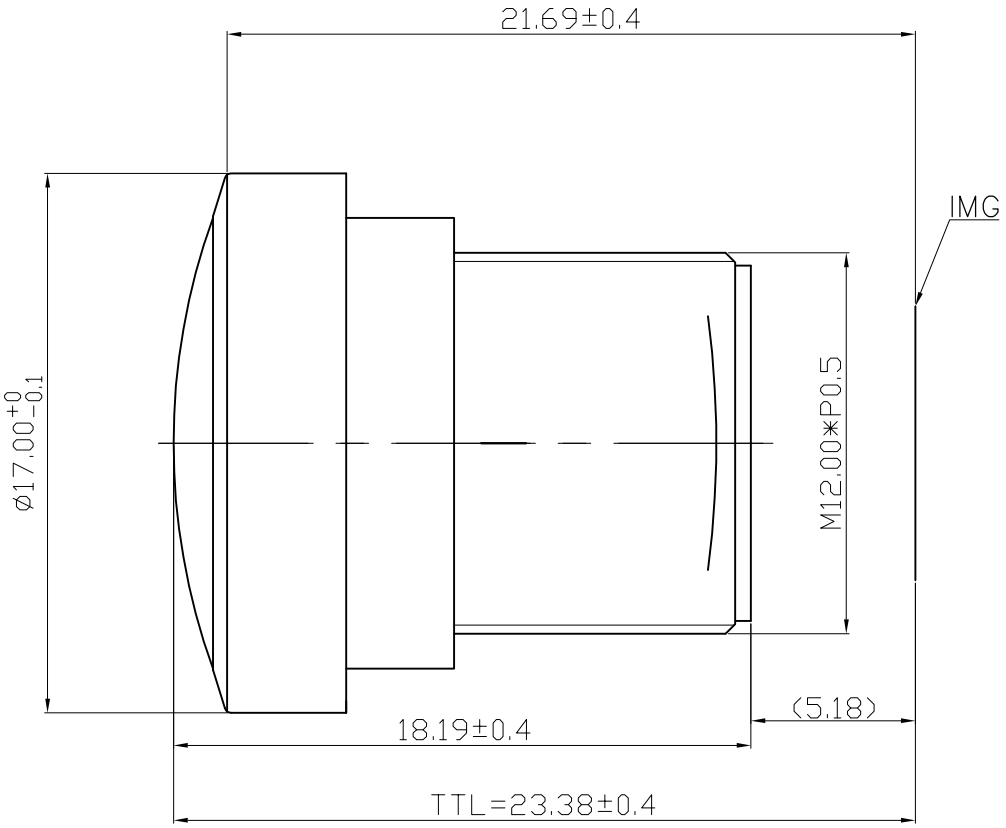

REV	DESCRIPTION	DATE	NAME
①			
②			
③			
④			

NAME	YT-1700-H1 SPEC			NAME	DATE
VIEW	REV	00	DRAWN	黄光深	2024.03.18
Wintop Optics			CHECKED		
			APPROVED		