YT-6052P-A1 Lens Specification

云泰型号:	客户型号:
YT-6052P-A1	

MAX Img-Circle（mm）	ø4.76
EFL（mm）	1.29
F/NO.	1.8
Optical TTL	12.95
Mechanical TTL	12.95
BACK FOCAL LENGTH	3.44
FLANGE BACK LENGTH	2.59
Optical Distortion	<-115%
RELATIVE ILLUMINATION	≥60%
CRA	23.5°
Pixel Size（μm）	1.4*1.4
Storage At Temperature	-20℃～+70℃
Recent Camera Distance	0.2
Infrared	No
WAVELENGTH	@420~610nm Tavg≥90% T=50% @650±10nm
Waterproof Level	IP67

OV5640	2592*1944	
D/ø4.54	190°	
H/ø3.63	146°	
V/ø2.72	112°	

REV.	00
REVISON HISTORY	
2024/02/27	NEW

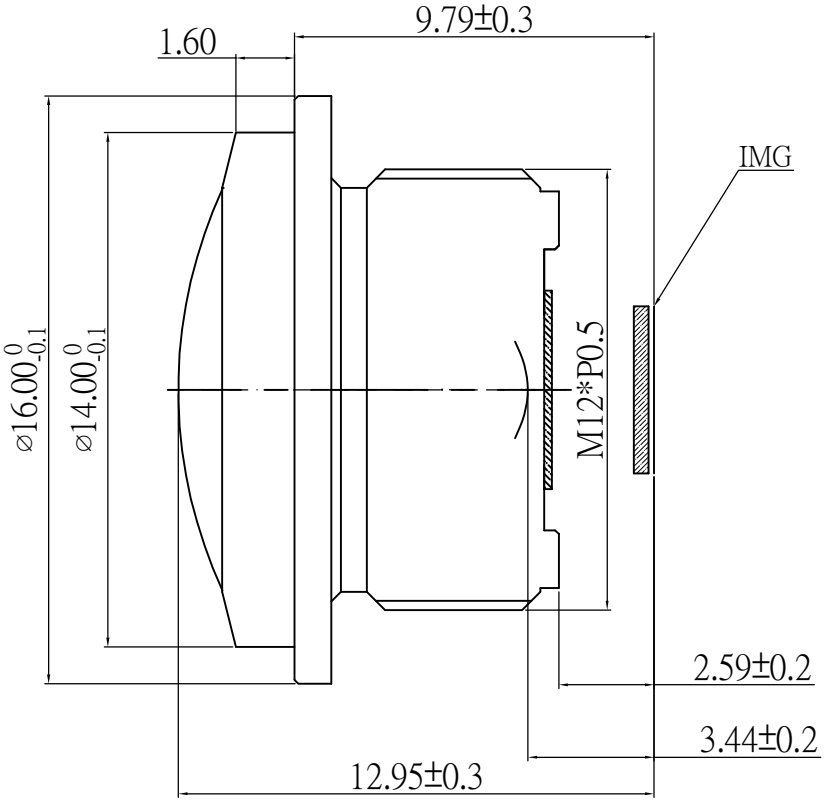

REV	DESCRIPTION	DATE	NAME
①			
②			
③			
④			

NAME	YT-6052P-A1 SPEC	SCALE		DRAWN	黄光深
VIEW	REV 00	DATE	2024.05.07	CHECKED	
Wintop Optics		BORDER		APPROVED	